4-Bit Single Chip Microcomputer

1. 4-Bit Microcomputer Features

- Makes new merits and value for user system
- High-speed (0.47 µs/5 V)
- Low voltage (1.0 µs/1.8 V)
- Application-specific
  - A/D converter, LCD, VFD, and small package
  - Thin package (1.2 mm)
- ZTAT™ Series

2. High Software Productivity

- Highly efficient ROM code
  - 10 bits/word instruction set
  - High-speed (0.89 µs → 0.47 µs)
  - 70% of instructions are executed in one cycle
- Sophisticated support tools
  - New 4-bit emulator E400
  - Source code debugger: Microsoft Windows® based
  - C-line assembler

H400 Series Product Codes

- General-Purpose and Application-Specific -

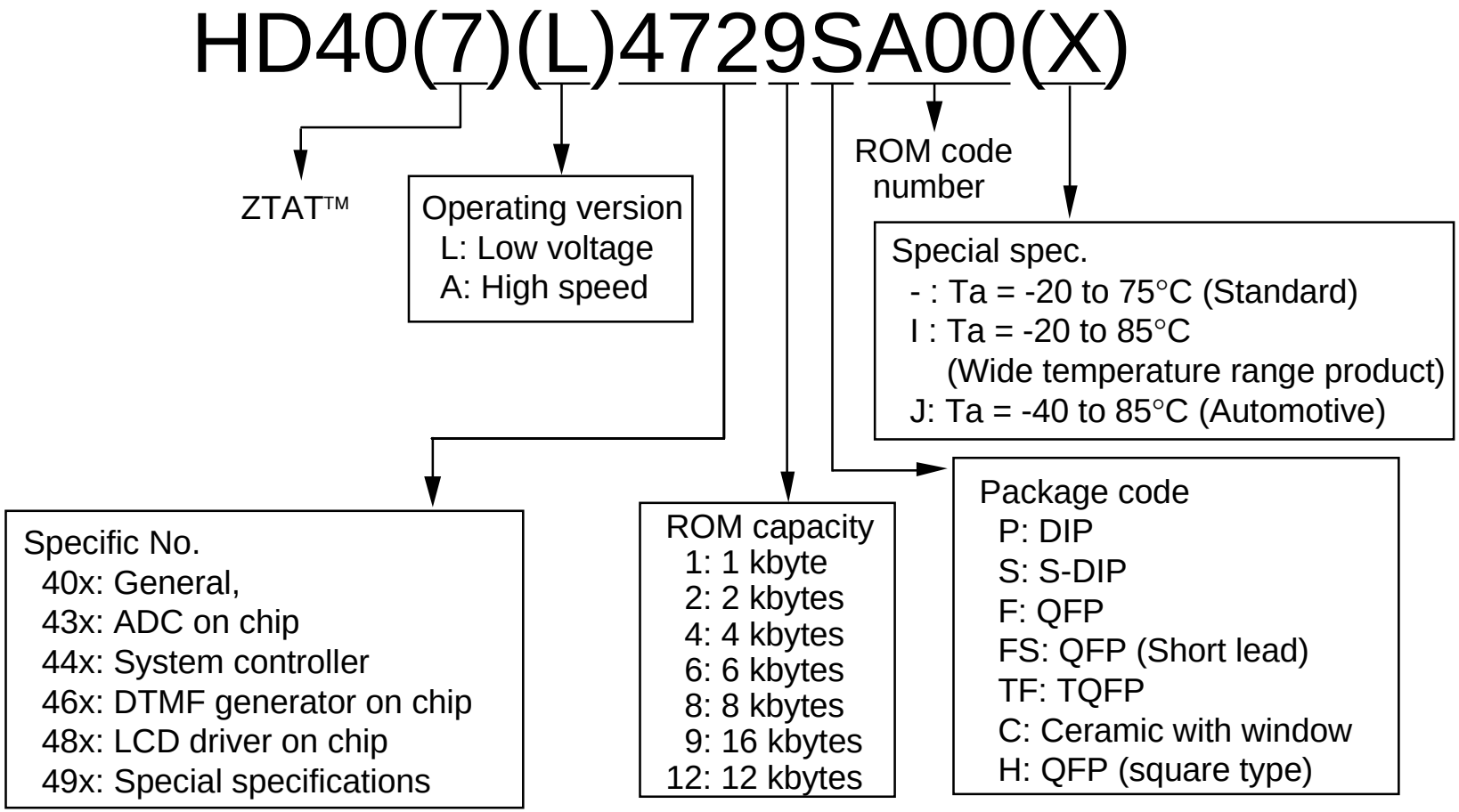

4-Bit Microcomputer Evolution

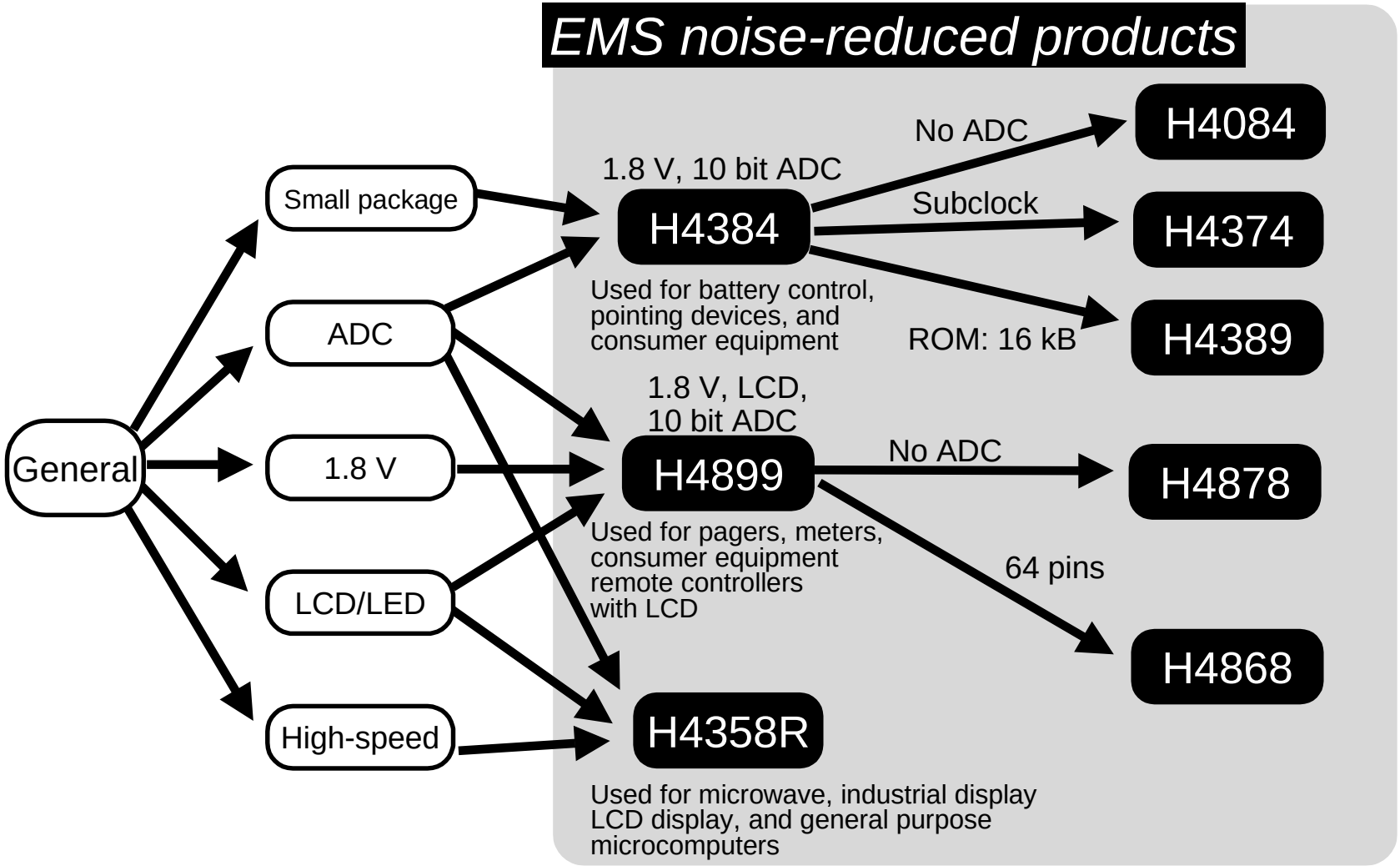

HMCS400 Series Evolution

Pin count \ Functions		ADC								1.8-V operation				1.8-V
		Fluoresces display				LCD							LCD	
				High speed			DTMF				ADC			
28 30					H4344 H4394						H4084	H4374 H4389 H4384			
42			H4318	H4358A	H4358 H4358R					H4654	H4054				
64		H4019	H4339	H4369A	H4369	H4328				H4669	H4459 H4069		H4868 (10 bit A/D)		
80					H4449	H4849		H4618	H4639R H4689				H4899 (10 bit A/D)	H4818	H4878
100						H4829R	H4629R								
Number of types	ZTAT™	3	4	2	3	4	1	1	3	2	4	2	1	2	
	Mask	4	11	7	16	12	3	4	12	3	11	4	3	8	2
Applications		AV Home appliances		Air conditioners Home appliances Telephones	Battery chargers Home appliances Car equipment	Home appliances Pagers	Radios Telephones	Telephones			Home appliances Telephones	Battery chargers Home appliances	Pagers Radios Rice-cookers Remote controls Home appliances	Pagers AV	Microwave ovens Remote controls

Built-in A/D Converter (General)

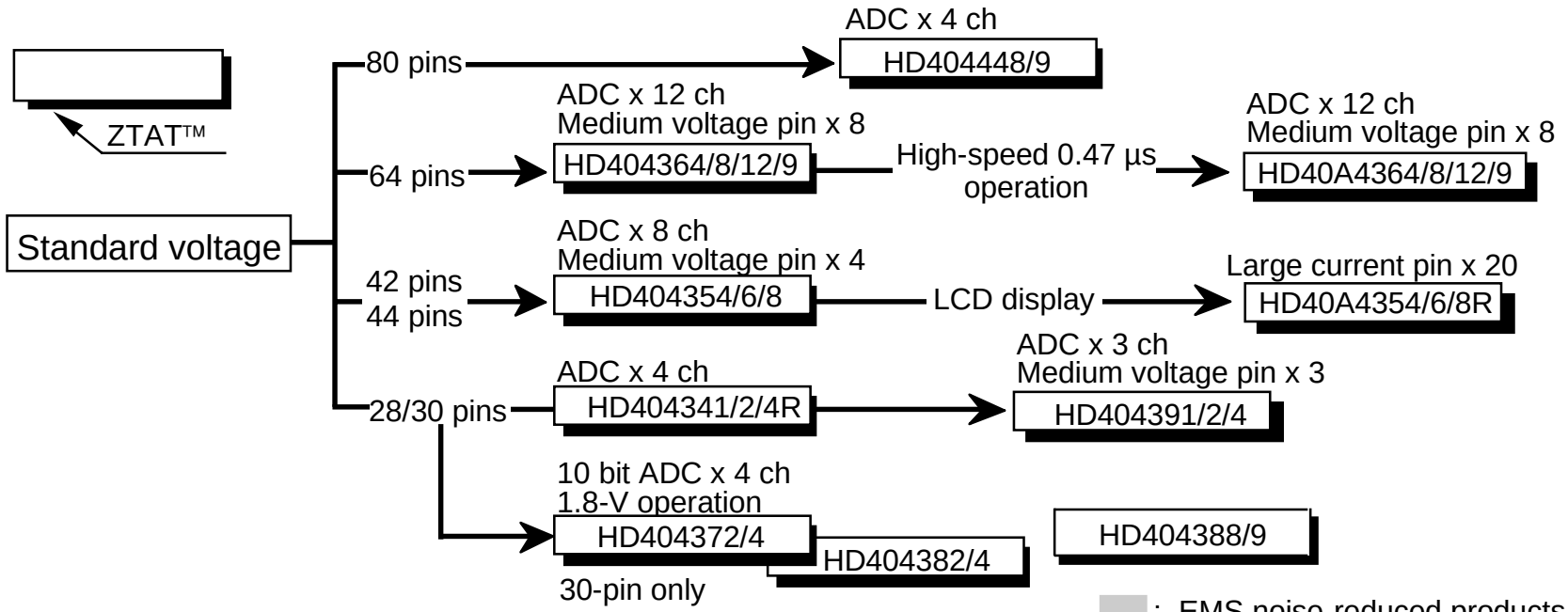

: EMS noise-reduced products

	H4448/9	H4341/2/4R	H4391/2/4	H4354/6/8	H4364/8 /12/9	H4372/4	H4382/4	H4388/9	H4354/6 /8R
ROM (kword)	8/16	1/2/4	1/2/4	4/6/8	4/8/12/16	2/4		8/16	4/6/8
RAM (digit)	1152	256	256	384	512	512			384
I/O pin (+12 V medium voltage)	64	22	21 (3)	34 (4)	54 (8)	20			34
Timer	4	2				3			
SCI (ch)	2	1							

Built-in DTMF Low Voltage Operation (Generator/Receiver)

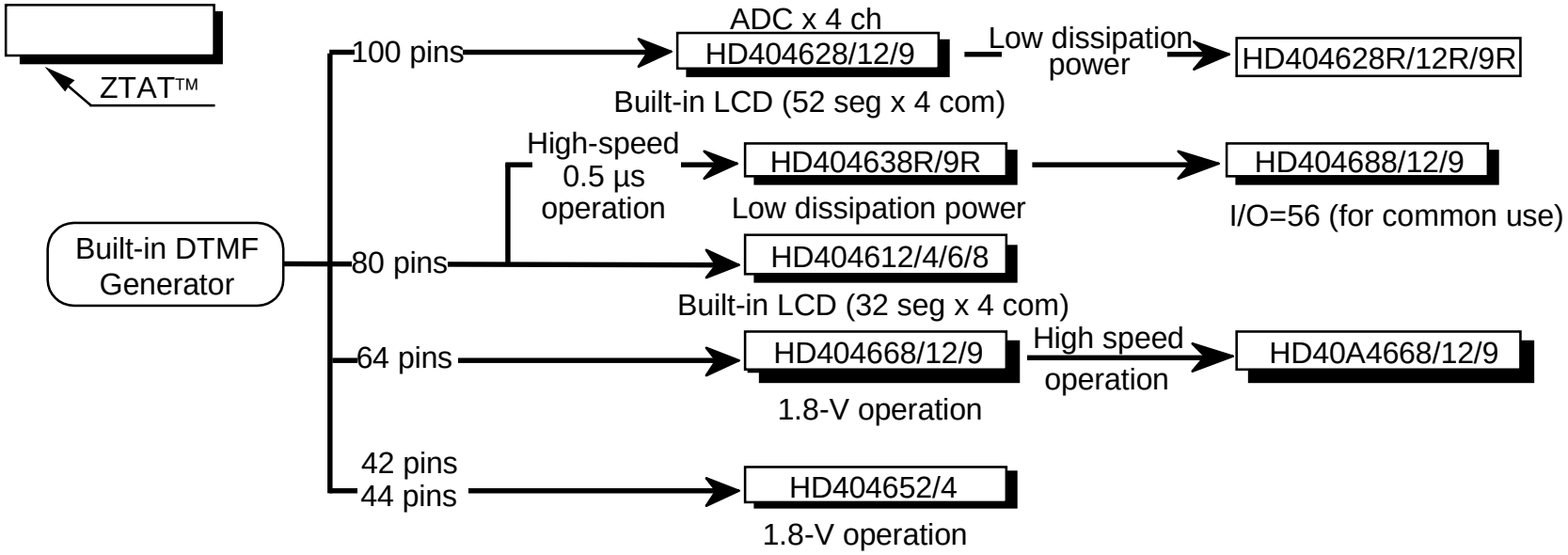

		H4638R/9R	H4612/4/6/8	H4628R/12R/9R	H4652/4	H4688/12/9	H4668/12/9
ROM (kword)		8/16	2/4/6/8	8/12/16	2/4	8/12/16	8/12/16
RAM (digit)		1152	1184	1876	512	768	1152
I/O		68	30	44	32	56	52
Timer		4	3	4	3	3	3
SCI (ch)		2	1			1	1
High current	Source10 mA	4	-	-	4	4	5
	Sink15 mA	8	10	10	6	8	4

Built-in LCD Driver and Low Voltage Operation

- Display Control -

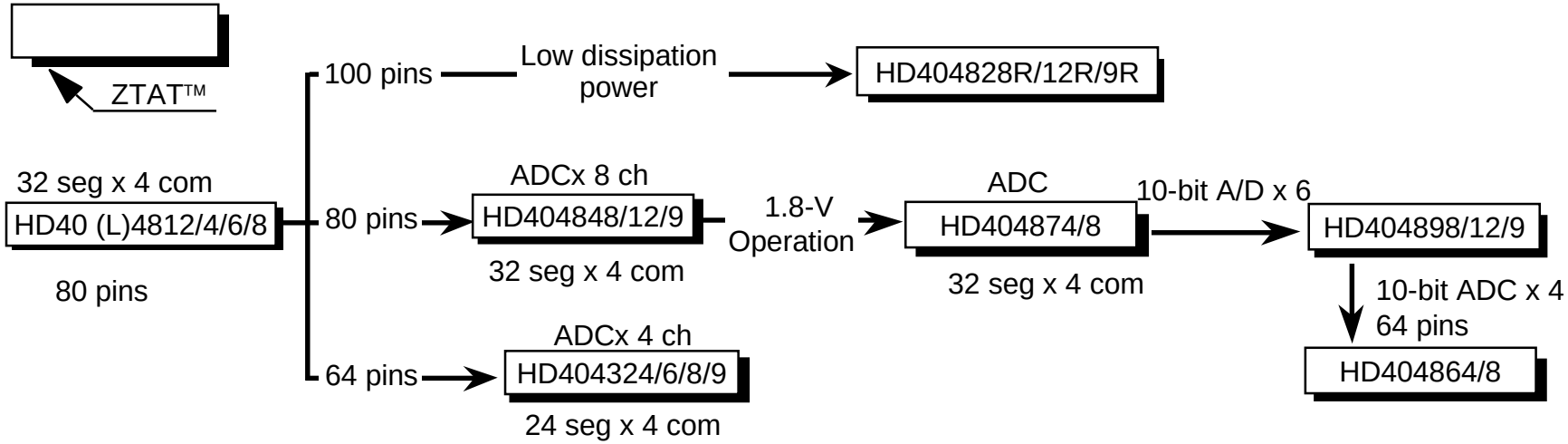

	H4812/4/6/8	H4828R/12R/9R	H4848/12/9	H4324/6/8/9	H4874/8	H4898/12/9	H4864/8
ROM (kword)	2/4/6/8	8/12/16	8/12/16	4/6/8/16	4/8	8/12/16	4/8
RAM (digit)	1184	1876	512/1184/1184	280/536	880	1344	408
I/O	30	44	35	35	46		41
Timer	3	4		3	4		3
SCI (ch)	1						
Other	-			Buzzer output Zero-cross detection	LCD: 32 seg x 4 com	LCD: 32 seg x 4 com ADC: 10 bits x 6 ch	LCD: 24 seg x 4 com ADC: 10 bits x 4 ch

Fluorescent Display Function

- Display Control -

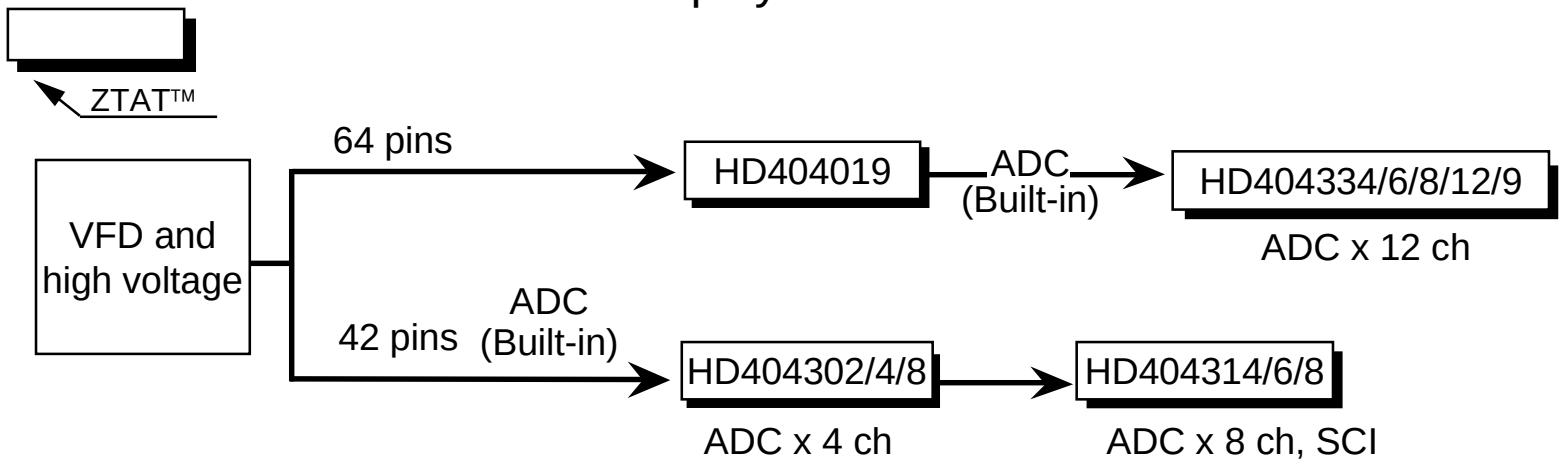

	H4019	H4334/6/8/12/9	H4302/4/8	H4314/6/8
ROM (kword)	16	4/6/8/12/16	2/4/8	4/6/8
RAM (digit)	992	512	160	384
I/O pin (High voltage)	58 (26)	54 (30)	33 (25)	34 (21)
Timer	2	3	2	3
SCI (ch)	1	1	-	1
ADC (ch)	-	12	4	8

1.8-V Operation and Built-in A/D Converter

- H4374, H4384, and H4389 Series -

Features

- Low voltage and built-in highly-accurate A/D converter
  - 1.8-V operation + 10-bit A/D converter
- EMS noise-reduced
- CR oscillation
- Compact packages
  - SSOP-30
  - DP-28S (H4384 only)
  - FP-48B (7 mm X 7 mm: Under development)
    Only MASK Version
- Applications
  - Chargers, small home appliance, and pointing devices

H4374/H4384/H4389
Block Diagram

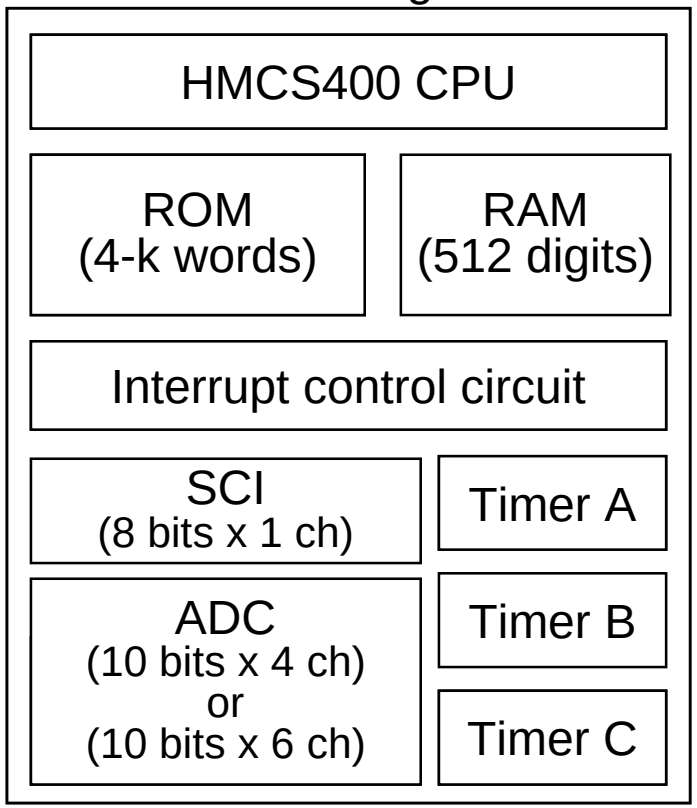

General-Purpose Microcomputer for LED Display

- H4358R Series (42 pins) -

Features

- N-MOS high-current port (I_{OL} = 15 mA) x 20 included
  - Direct drive of display LED
- Lineup of resistance-oscillation products
  - Connection of resistor instead of ceramic oscillator
- Protection from EMS noise
- High-speed operation
  - Minimum instruction execution time = 0.47 mm (external 8.5 MHz at 4 to 5.5 V)

H4358R Block Diagram

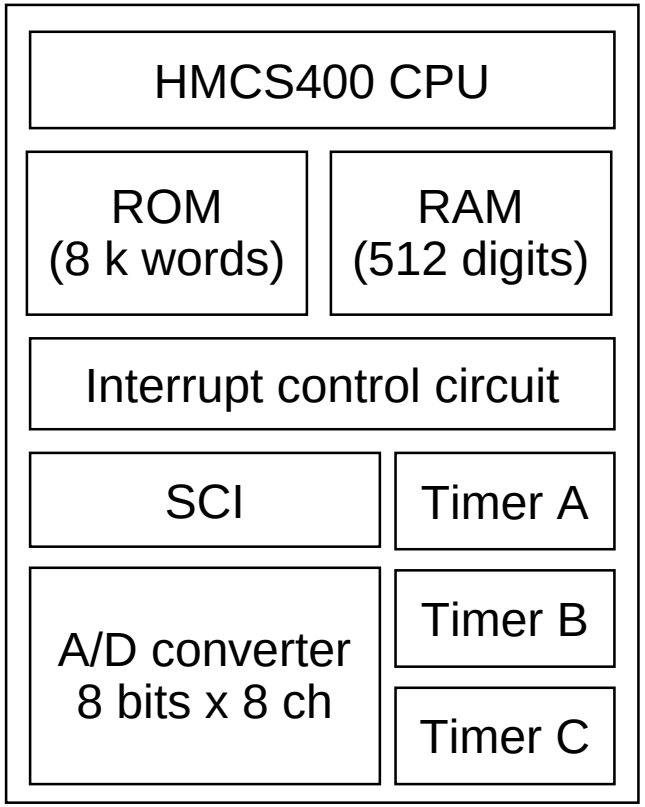

Internal 1.8 V with Built-in LCD C/D and A/D Converter

- H4868 Series (64 pins) -

Features

- Low voltage, high precision, and built-in A/D converter
  - 1.8 V operation and 10-bit A/D converter
- EMS noise-reduced
- Easy-to-use functions
  - Module standby
  - Key wake-up
  - Buzzer output
  - PWM output

System configuration

- Home appliances
  - Microwave ovens, remote controllers with LCD, electronic rice cookers, and electronic thermos flasks
- Communications
  - Radios and phone portable units
- Industrial
  - Hemadynanometers and other health-related devices

H4868 Block Diagram

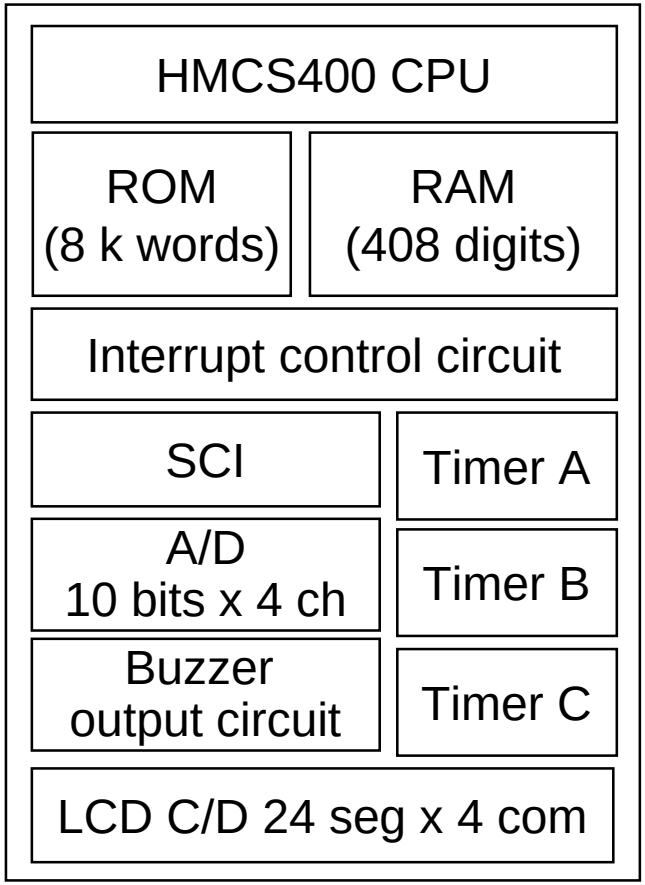

System Configuration of Rice Cooker

- Liquid Crystal Display Type Rice Cooker -

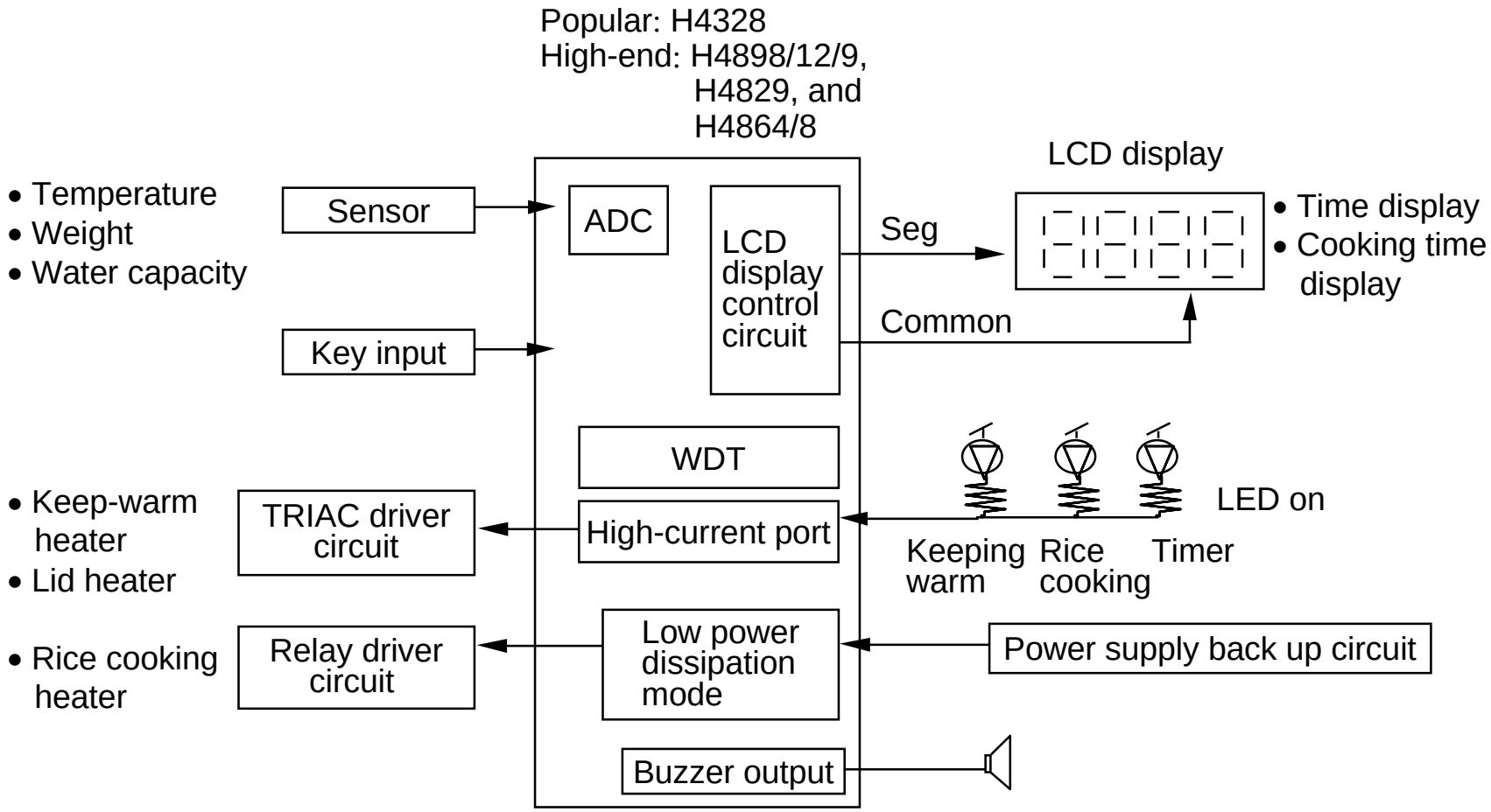

System Configuration of Battery Chargers

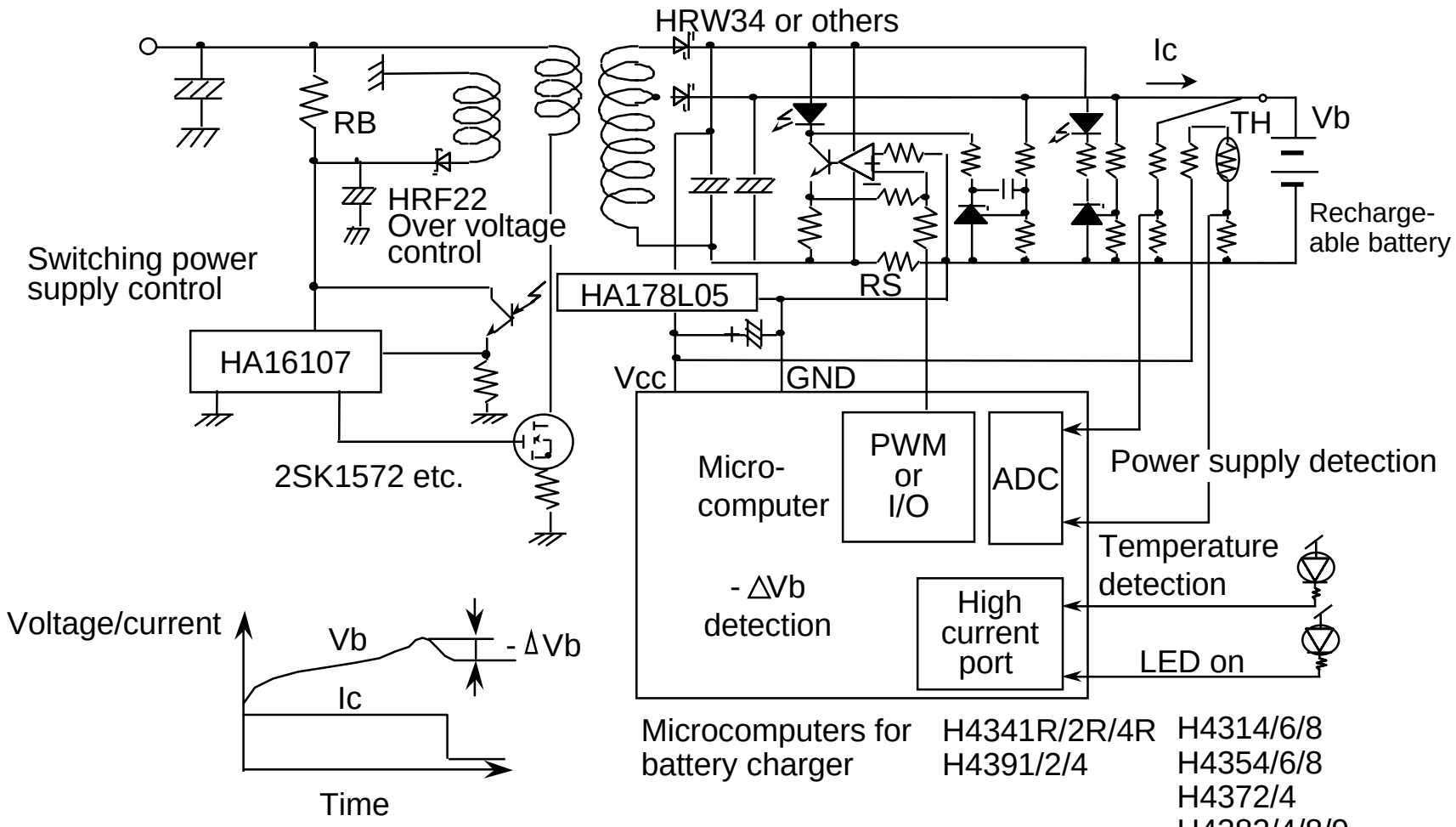

System Configuration of Remote Control Transmitter

H4878/H4899/H4868

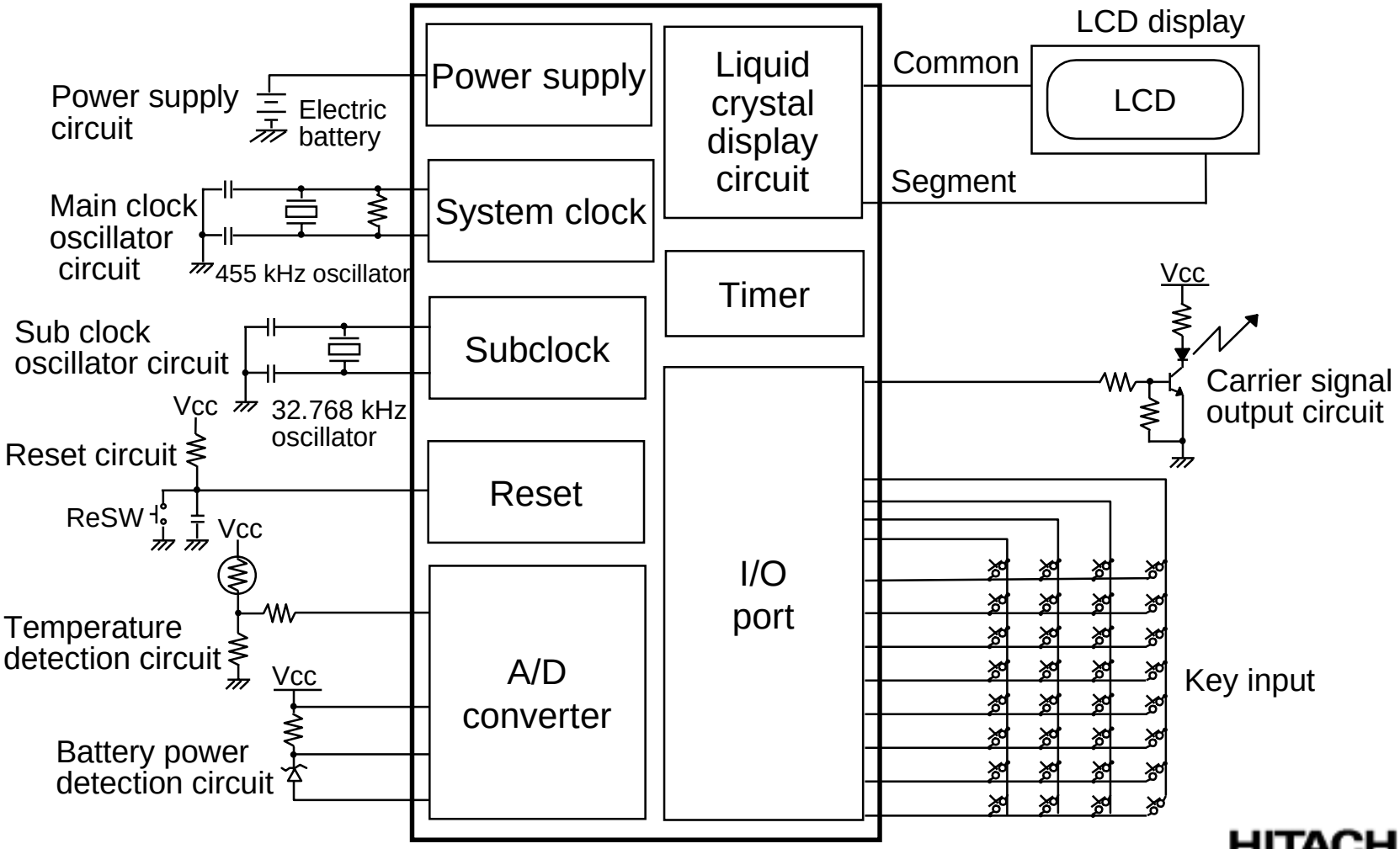

HMCS400 Series Lineup (1)

- General: H40xx Series -

Series	Type No.		ROM (x 10 bits)	RAM (x 4 bits)	Supply voltage (V)	Min. execution time (µs)	Peripheral functions							Package
							Compa-rator	Timer (8 bits)	Input capture	I/O port	SCI (8 bits)	Medium vol. (+12 V)	High vol. (- 40 V)	
H4019	Mask ROM	HD404019R	16 k	992	3.5-6.0	0.89 (fosc = 4.5 MHz)	-	x2	-	58	x1	-	26	DP-64S FP-64A FP-64B
		HD40L4019R			3.5-6.0	0.89 (fosc = 4.5 MHz)								DP-64S FP-64A
					2.7-6.0	1.12 (fosc = 3.58 MHz)								
	ZTAT™	HD4074019			4.5-5.5	0.89 (fosc = 4.5 MHz)								DP-64S FP-64A FP-64B DC-64S
		HD40L4019			4.5-5.5	0.89 (fosc = 4.5 MHz)								DP-64S FP-64A
					3.0-5.5	1.12 (fosc = 3.58 MHz)								
H4054	Mask ROM	HD404052	2 k	512	1.8-6.0	1 (fosc = 4 MHz)	Yes	x3	Yes	35	x1	-	-	DP-42S FP-44
		HD404054	4 k											
		HD40A4052	2 k		4.0-6.0	0.5 (fosc = 8 MHz)								
		HD40A4054	4 k											
	ZTAT™	HD4074054			2.7-5.5	1 (fosc = 4 MHz)								
H4069	Mask ROM	HD404068/12/9	8 k /12 k /16 k	1152	1.8-5.5	1 (fosc = 4 MHz)	Yes	x3	Yes	55	x1	-	-	FP-64A
		HD40A4068/12/9			1.8-5.5 4.0-5.5	1 (fosc = 4 MHz) 0.5 (fosc = 8 MHz)								
	ZTAT™	HD407A4069	16 k		2.2-5.5	1 (fosc = 4 MHz)								
					4.0-5.5	0.5 (fosc = 8 MHz)								
H4084	Mask ROM	HD404084	4 k	256	1.8-5.5	0.89 (fosc = 4.5 MHz)	-	x1 16 bits x 1 (8 bits x 2)	-	20	x1	-	-	DP-28S FP-30D
		HD40A4084			4.0-5.5 1.8-5.5	0.47 (fosc = 8.5 MHz) 0.89 (fosc = 4.5 MHz)								
		HD40C4084			1.8-5.5	1.14 (fosc = 3.5 MHz)								

- Enhanced Timer: H44XX Series -

Series	Type No.		ROM (x 10 bits)	RAM (x 4 bits)	Supply voltage (V)	Min. execution time (µs)	Peripheral functions				Package
							Timer (8 bits)	SCI (8 bits)	Other	I/O port	
H4449	Mask ROM	HD404448	8 k	1152	2.7-6.0	1 (fosc = 4 MHz)	x4	x2	ADC (8 bits x 4)	64	FP-80A,TFP-80F
		HD404449	16 k								
	ZTAT™	HD4074449			2.7-5.5						
H4459	Mask ROM	HD404458	8 k	512	1.8-3.6	1 (fosc = 4 MHz)	x4	x1	Com-parator	56	FP-64A
		HD404459	16 k	768							
	ZTAT™	HD4074459			2.2-2.7	2 (fosc = 2 MHz)					
					2.7-3.6	1 (fosc = 4 MHz)					

HMCS400 Series Lineup (2)

- Built-in A/D Converter: H43xx Series -

Series	Type No.		ROM (x 10 bits)	RAM (x 4 bits)	Supply voltage (V)	Min. execution time (µs)	Peripheral functions						Package
							ADC (8 bits)	Timer (8 bits)	Others	I/O port	High vol. (- 40 V)	Medium vol. (+12 V)	
H4318	Mask ROM	HD404314	4 k	384	4.0-5.5	0.89 (fosc = 4.5 MHz)	x8	x3	Input capture	34	21	-	DP-42S FP-44A
		HD404316	6 k										
		HD404318	8 k										
	ZTAT™	HD4074318											
H4328	Mask ROM	HD404324	4 k	280	2.7-6.0	1.78 (fosc = 4.5 MHz)	x4	x3	LCD cont-roller (24 seg x 4 com)	35	-	-	DP-64S FP-64A *3 FP-64B
		HD404324U											
		HD404326	6 k										
		HD404326U											
		HD404328	8 k										
		HD404328U *1											
	ZTAT™	HD4074329	16 k	536	2.9-5.5								
		HD4074329U *1											
H4339	Mask ROM	HD404334	4 k	512	4.0-5.5	0.89 (fosc = 4.5 MHz)	x12	x3	Input capture	54	30	-	DP-64S FP-64B
		HD404336	6 k										
		HD404338	8 k										
		HD4043312	12 k										
		HD404339	16 k										
	ZTAT™	HD4074339											
H4358	Mask ROM	HD404354	4 k	384	2.7-6.0	0.8 (fosc = 5 MHz)	x8	x3	Input capture	34	-	4	DP-42S FP-44A
		HD404356	6 k										
		HD404358	8 k										
		HD40A4354	4 k		4.5-5.5 *2 (2.7-6.0)	0.47 (fosc = 8.5 MHz) (0.8(fosc = 5 MHz))							
		HD40A4356	6 k										
		HD40A4358	8 k										
	ZTAT™	HD407A4359	16 k	512									
H4358R	Mask ROM	HD404354R	4 k	512	2.5-5.5	0.8 (fosc = .5 MHz)	x8	x3	20 large-current N-MOSs	34	-	-	DP-42S FP-44A
		HD404356R	6 k										
		HD404358R	8 k										
		HD40A4354R	4 k		2.5-5.5 4.0-5.5	0.8 (fosc = 5 MHz) 0.47 (fosc = 8.5 MHz)							
		HD40A4356R	6 k										
		DH40A4358R	8 k										
		HD40C4354R	4 k		2.5-5.5	1.14 (fosc = 3.5 MHz)							
		HD40C4356R	6 k										
		HD40C4358R	8 k										
	ZTAT™	HD407A4359R	16 k		2.5-5.5	0.8 (fosc = 5 MHz)							
					4.0-5.5	0.47 (fosc = 8.5 MHz)							
		HD407C4359R			2.5-5.5	1.14 (fosc = 3.5 MHz)							
H4369	Mask ROM	HD404364	4 k	512	2.7-6.0	0.8 (fosc = 5 MHz)	x12	x3	Input capture	54	-	8	DP-64S FP-64A FP-64B
		HD404368	8 k										
		HD4043612	12 k										
		HD404369	16 k										
		HD40A4364	4 k		4.5-5.5 *2 (2.7-6.0)	0.47 (fosc = 8.5 MHz) (0.8(fosc = 5 MHz))							
		HD40A4368	8 k										
		HD40A43612	12 k										
		HD40A4369	16 k										
	ZTAT™	HD407A4369											
H4344R	Mask ROM	HD404341R	1 k	256	2.5-5.5	0.89 (fosc = 4.5 MHz)	x4	x2	-	22	-	-	DP-28S FP-28DA FP-30D
		HD404342R	2 k										
		HD404344R	4 k										
		HD40C4341R	1 k			1.14 (fosc = 4.5 MHz)							
		HD40C4342R	2 k										
		HD40C4344R	4 k										
	ZTAT™	HD4074344			2.7-5.5 *3	0.89 (fosc = 4.5 MHz)							

Notes: *1 External LCD voltage splitting resistor can be added
*2 ZTAT™: 2.7-5.5 V
*3 Wide range temperature product (3.0-5.5 V)

HMCS400 Series Lineup (3)

- Built-in A/D Converter: H43xx Series -

Series	Type No.		ROM (x 10 bits)	RAM (x 4 bits)	Supply voltage (V)	Min. execution time (µs)	Peripheral functions						Package
							ADC (8 bits)	Timer (8 bits)	Others	I/O port	High vol. (- 40 V)	Medium vol. (+12 V)	
H4374	Mask ROM	HD404372	2 k	512	1.8-5.5	0.89 (fosc = 4.5 MHz)	10 bits x 4	x1 16 bits x 1 (8 bits x 2)	32kHz opera-tion	20	-	-	FP-48B FP-30D
		HD404374	4 k										
		HD40A4372	2 k		1.8-5.5 4.0-5.5	0.89 (fosc = 4.5 MHz) 0.47 (fosc = 8.5 MHz)							
		HD40A4374	4 k										
		HD40C4372	2 k		1.8-5.5	1.14 (fosc = 8.5 MHz)							
		HD40C4374	4 k										
	ZTAT™	HD407A4374			2.0-5.5 4.0-5.5	0.89 (fosc = 4.5 MHz) 0.47 (fosc = 8.5 MHz)							FP-30D
		HD407C4374			2.0-5.5	1.14 (fosc = 3.5 MHz)							
H4384 H4389	Mask ROM	HD404382	2 k	512	1.8-5.5	0.89 (fosc = 4.5 MHz)	10 bits x 4	x1 16 bits x 1 (8 bits x 2)	-	20	-	-	FP-48B FP-28S FP-30D
		HD404384	4 k				10 bits x 6						
		HD404388	8 k										
		HD404389	16 k										
		HD40A4382	2 k		1.8-5.5 4.0-5.5	0.89 (fosc = 4.5 MHz) 0.47 (fosc = 8.5 MHz)	10 bits x 4						
		HD40A4384	4 k				10 bits x 6						
		HD40A4388	8 k										
		HD40A4389	16 k										
		HD40C4382	2 k		1.8-5.5	0.89 (fosc = 4.5 MHz)	10 bits x 4						
		HD40C4384	4 k				10 bits x 6						
		HD40C4388	8 k										
		HD40C4389	16 k										
	ZTAT™	HD407A4384	4 k		2.0-5.5 4.0-5.5	0.89 (fosc = 4.5 MHz) 0.47 (fosc = 8.5 MHz)	10 bits x 4						FP-28S FP-30D
		HD407A4389	16 k		2.0-5.5 4.0-5.5	0.89 (fosc = 4.5 MHz) 0.47 (fosc = 8.5 MHz)	10 bits x 6						
		HD407C4384	4 k		2.0-5.5	1.14 (fosc = 3.5 MHz)	10 bits x 4						
		HD407C4389	16 k				10 bits x 6						
H4394	Mask ROM	HD404391	1 k	256	2.7-5.5	0.8 (fosc = 4.5 MHz)	x3	x2	-	21	-	3	DP-28S FP-28DA FP-30D
		HD404392	2 k										
		HD404394	4 k										
	ZTAT™	HD4074394			2.7-5.5*								

*: Wide range temperature product (3.0-5.5 V)

HMCS400 Series Lineup (4)

- Built-in DTMF: H46xx Series -

Series	Type No.		ROM (x 10 bits)	RAM (x 4 bits)	Supply voltage (V)	Min. execution time (µs)	Peripheral functions					Package
							DTMF generator	DTMF receiver	Timer (8 bits)	Others	I/O port	
H4618	Mask ROM	HD404612	2 k	1184	2.7-6.0	5 (fosc = 800 kHz)	Yes	-	x3	LCD controller (32 seg x 4 com)	30	FP-80A FP-80B TFP-80
		HD404614	4 k									
		HD404616	6 k									
		HD404618	8 k									
	ZTAT™	HD4074618			3.0-5.5							
H4629R	Mask ROM	HD404628R	8 k	1876	3.0-6.0	1 (fosc = 4 MHz)	Yes	-	x4	LCD conroller (52 seg x 4 com) ADC (8 bits x 4)	44	FP-100A FP-100B TFP-100B
					2.7-6.0	2 (fosc = 2 MHz)						
		HD4046212R	12 k		3.0-6.0	1 (fosc = 4 MHz)						
					2.7-6.0	2 (fosc = 2 MHz)						
		HD404629R	16 k		3.0-6.0	1 (fosc = 4 MHz)						
					2.7-6.0	2 (fosc = 2 MHz)						
	ZTAT™	HD4074629			3.5-5.5	1 (fosc = 4 MHz)						
					2.7-5.5	2 (fosc = 2 MHz)						
H4639R	Mask ROM	HD404638R	8 k	1152	2.7-6.0 (2.2-6.0) *2	1 (fosc = 4 MHz)	Yes	-	x4	Com-parator	68	FP-80B
		HD404639R	16 k									
		HD40A4638R	8 k		4.0-6.0 *1, *3 (2.7-6.0) *1, *2, *4 (2.2-6.0)	0.5 (fosc = 8 MHz) (1(fosc = 4 MHz))	Yes	-	x4	Com-parator	68	FP-80B
		HD40A4639R	16 k									
	ZTAT™	HD407A4639R										
H4654	Mask ROM	HD404652	2 k	512	1.8-6.0	1 (fosc = 4 MHz)	Yes	-	x3	Com-parator	32	FP-44A DP-42A
		HD404654	4 k									
	ZTAT™	HD4074654			2.7-5.5							
H4669	Mask ROM	HD404688/12/9	8 k/ 12 k/ 16 k	1152	1.8-5.5	1 (fosc = 4 MHz)	Yes	-	x3	Com-parator x 2 ch	52	FP-64A
		HD40A4688/12/9			1.8-5.5 4.0-5.5	1 (fosc = 4 MHz) 0.5 (fosc = 8 MHz)						
	ZTAT™	HD407A4669	16 k		2.2-5.5	1 (fosc = 4 MHz)	Yes					
					4.0-5.5	0.5 (fosc = 8 MHz)						
H4689	Mask ROM	HD404688	8 k	768	2.7-6.0 (2.2-6.0) *2	1 (fosc = 4 MHz)	Yes	-	x3	Com-parator	56	FP-80B
		HD4046812	12 k									
		HD404689	16 k									
		HD40A4688	8 k		4.0-6.0 *1, *3 (2.7-6.0) *1, *2, *4 (2.2-6.0)	0.5 (fosc = 8 MHz)*1 (1(fosc = 4 MHz))						
		HD40A46812	12 k									
		HD40A4689	16 k									
	ZTAT™	HD407A4689										

Notes:
*1 fosc = 4 MHz or less
*2 Sub-active operation
*3 ZTAT™: 5.5 V (max)
*4 Not applicable to be ZTAT™

HMCS400 Series Lineup (5)

- LCD Display Controller/Driver: H48xx Series -

Series	Type No.		ROM (x 10 bits)	RAM (x 4 bits)	Supply voltage (V)	Min. execution time (µs)	Peripheral functions				Package
							LCD controller (x 4 com)	Timer (8 bits)	Others	I/O port	
H4818	Mask ROM	HD404812	2 k	1184	4.0-6.0	0.95 (fosc = 4.2 MHz)	32 seg	x3	Com-parator	30	FP-80A FP-80B TFP-80
		HD40L4812			2.7-6.0	4.45 (fosc = 0.9 MHz)					
		HD404814	4 k		4.0-6.0	0.95 (fosc = 4.2 MHz)					
		HD40L4814			2.7-6.0	4.45 (fosc = 0.9 MHz)					
		HD404816	6 k		4.0-6.0	0.95 (fosc = 4.2 MHz)					
		HD40L4816			2.7-6.0	4.45 (fosc = 0.9 MHz)					
		HD404818	8 k		4.0-6.0	0.95 (fosc = 4.2 MHz)					
		HD40L4818			2.7-6.0	4.45 (fosc = 0.9 MHz)					
	ZTAT™	HD4074818			4.0-5.5	0.95 (fosc = 4.2 MHz)					
		HD407L4818			3.0-5.5	4.45 (fosc = 0.9 MHz)					
H4829R	Mask ROM	HD404828R	8 k	1876	3.0-6.0	1 (fosc = 4 MHz)	52 seg	x4	ADC (8 bits x 4)	44	FP-100A FP-100B TFP-100B
					2.7-6.0	2 (fosc = 2 MHz)					
		HD4048212R	12 k		3.0-6.0	1 (fosc = 4 MHz)					
					2.7-6.0	2 (fosc = 2 MHz)					
		HD404829R	16 k		3.0-6.0	1 (fosc = 4 MHz)					
					2.7-6.0	2 (fosc = 2 MHz)					
	ZTAT™	HD4074829			4.5-5.5	0.95 (fosc = 4.2 MHz)					
					3.5-5.5	1 (fosc = 4 MHz)					
					2.7-5.5	2 (fosc = 2 MHz)					
H4849	Mask ROM	HD404848	8 k	512	2.7-6.0 (2.2-6.0)*	0.89 (fosc = 4.5 MHz)	32 seg	x4	ADC (8 bits x 8)	35	FP-80A FP-80B TFP-80C
		HD4048412	12 k	1184							
		HD404849	16 k								
	ZTAT™	HD4074849			2.7-5.5						
H4868	Mask ROM	HD404864	4 k	408	1.8-5.5	0.89 (fosc = 4.5 MHz)	24 seg	x1 16 bits x 1	ADC (10 bits x 4)	41	DP-64S FP-64A
		HD404868	8 k								
	ZTAT™	HD4074869	16 k		2.0-5.5						
H4878	Mask ROM	HD404874	4 k	880	1.8-5.5	0.89 (fosc = 4.5 MHz)	32 seg	x4	-	46	FP-80A TFP-80C
		HD404878	8 k								
	ZTAT™	HD4074889	16 k	1344	2.0-5.5			x1 16 bits x 1 (8 bits x 2)	ADC (8 bits x 6)		
H4899	Mask ROM	HD404898	8 k	1344	1.8-5.5	0.89 (fosc = 4.5 MHz)	32 seg	x2 16 bits x 1 (8 bits x 2)	ADC (10 bits x 6)	46	FP-80A TFP-80C
		HD4048912	12 k								
		HD404899	16 k								
	ZTAT™	HD4074899			2.0-5.5						

* Sub-active operation