RF Components

Directional Couplers
Pin-Terminal and Connector Types

CB Series

FEATURES

- High-density circuit design has resulted in superior compactness.
- Wideband characteristics.
- No induction noise (EMC).
- Reliable performance over an extended service life.

APPLICATIONS

Radio equipment, broadcast equipment, studio equipment, measuring devices.

MINIATURE CASE TYPE SHAPES AND DIMENSIONS

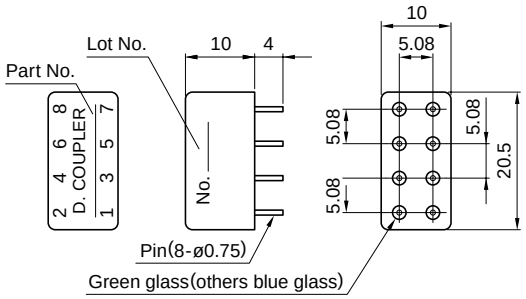

Weight: 5g

Dimensions in mm

PIN CONNECTIONS

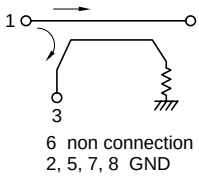

ELECTRICAL CHARACTERISTICS

Part No.	Frequency range (MHz)	Coupling (dB)	VSWR max. Z0=50, 75Ω	Directivity (dB) min.	Insertion loss (dB) max.	Handling power (W)	Internal load dissipation (W)	Weight (g)	Connector type
10dB Coupling factor									
CB10D4-50	0.06 to 25	10±0.7	1.2[50Ω]	30	1	1	1/8	5	Pin
CB10D2-50	5 to 500	10.5±1	1.3[50Ω]	20	1.7	1	1/8	5	Pin
CB10D1-75	0.5 to 230	10±1	1.25[75Ω]	20	1.3	1	1/8	5	Pin
CB10D4-75	0.08 to 25	10±0.7	1.2[75Ω]	30	1	1	1/8	5	Pin
20dB Coupling factor									
CB20D2-50	5 to 500	20±1	1.3[50Ω]	25	0.8	1	1/8	5	Pin
CB20D4-50	0.05 to 25	20±0.7	1.15[50Ω]	45	0.4	1	1/8	5	Pin
CB20D1-75	0.5 to 230	20±1	1.2[75Ω]	25	0.6	1	1/8	5	Pin
CB20D4-75	0.07 to 25	20±0.7	1.15[75Ω]	40	0.5	1	1/8	5	Pin

- Temperature range: –20 to +60°C/Operating ambient humidity: 95(%)RH max.

MEDIUM AND HIGH POWER TYPE SHAPES AND DIMENSIONS

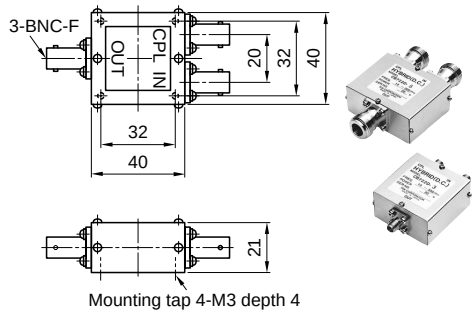

Fig. 1

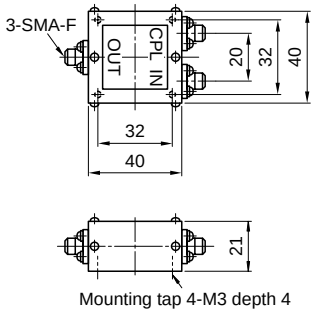

Fig. 2

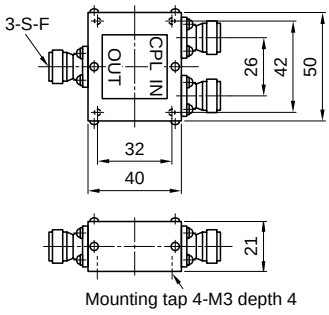

Fig. 3

Dimensions in mm

ELECTRICAL CHARACTERISTICS

Part No.	Frequency range (MHz)	Coupling (dB)	VSWR max. Z0=50Ω	Directivity (dB) min.	Insertion loss (dB) max.	Handling power (W)	Internal load dissipation (W)	Weight (g)	Connector type	Fig.
CB722D-B	15 to 300	20±0.7	1.2	35	0.5	20	0.25	70	BNC	1
CB722D-3	15 to 300	20±0.7	1.2	35	0.5	20	0.25	50	SMA	2
CB722D-S	15 to 300	20±0.7	1.2	35	0.5	20	0.25	100	S-R*	3

* Equivalent to N type
- Temperature range: –20 to +60°C/Operating ambient humidity: 95(%)RH max.

⚠ Specifications which provide more details for the proper and safe use of the described product are available upon request.
All specifications are subject to change without notice.
TDK