Isolator
Microstrip
Model: DSS1100-A

Application - SPACE

- Phased Array

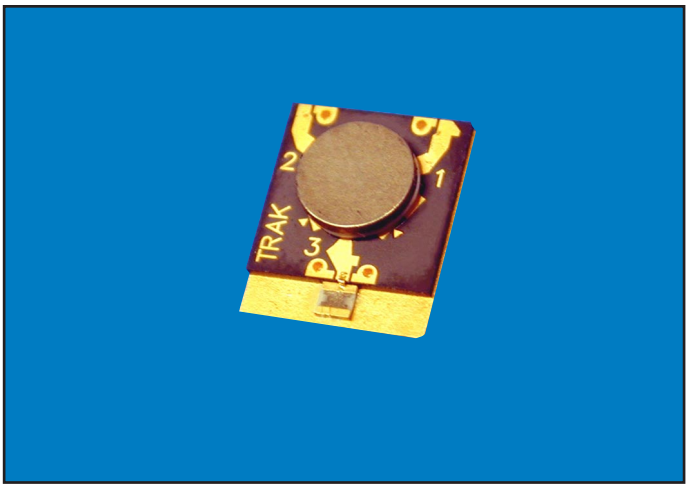

Benefits

- Low Mass
- Broad Bandwidth
- Low Loss
- Wide Temperature Range
- Reliable Performance

Features

- Few Piece Parts
- Suitable for Inclusion in Hybrid Systems
- 10 W Peak Power
- Options: Single/Dual Junction, CW/CCW Orientation, Bandwidth, Commercial and Military Grades

Specifications

Parameter	Specification			Unit
Frequency	8500 - 10500			MHz
	Min	Typ	Max	
Isolation	15	20	-	dB
Insertion Loss	-	0.35	0.6	dB
Return Loss	15	20	-	dB

Parameter	Specification			Unit
	Min	Typ	Max	
Operating Temp.	-10	-	+60	°C
Forward Power	-	-	4	W
Reverse Power	-	-	2	W
Interface	Wire/Ribbon Bonding			-

Drawing

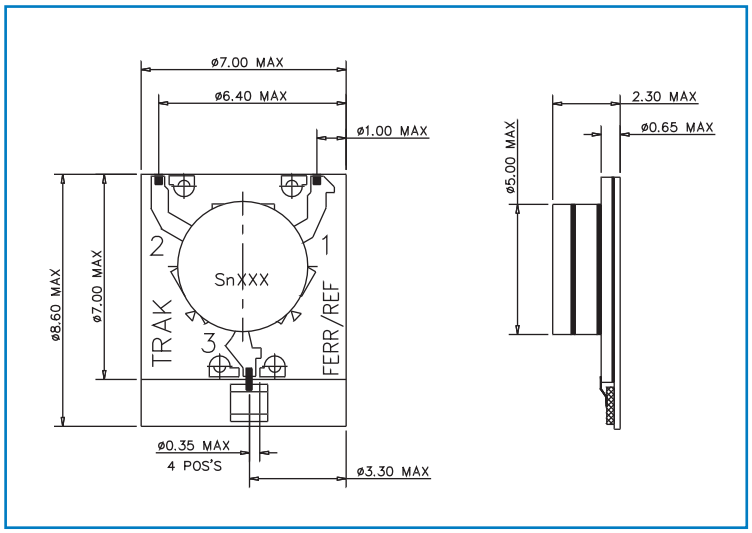

Dimensions: mm

TRAK Microwave Limited
Dunsinane Avenue, Dundee, Scotland DD2 3QF
Phone: +44 (0)1382 427 200 ◆ Fax: +44 (0)1382 833 599
E-mail: trakeurope@trak.com ◆ www.trak.com

Specifications subject to change without notice

©1999 TRAK Communications, Inc. Doc #SC301ds0401